Cable and Pipe Entry Products

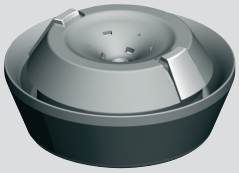

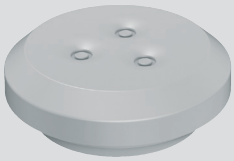

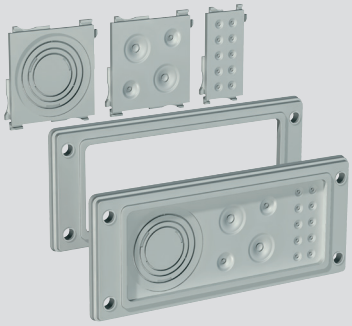

Cable penetration by design

KLIKSEAL®* | *RUTASEAL®* | *TSS* | *Design-A-Flange

TST
TAPPER SEALING TECHNOLOGY

News

We are expanding the popular TSS product family.

- **TSS** is now available in additional sizes including M40 and PG9-PG29.
  See page 19 for more information.
- **TSS Multi** is the latest addition to the TSS family. You are now able to seal up to three cables in one opening.
  See page 21 for more information.
- **TSS** is also available in V0 rated material in all sizes and versions.
  See page 22 for more information.
- **Rutaseal** available in M63 in black, grey and light grey EPDM and in Chloroprene.
  See page 12 for more information.

Content .....Page

Tapper Sealing Technology AB - The Company 4

KLIKSEAL® ..... 5 - 10

RUTASEAL® - RUTASEAL LIGHT® ..... 11 - 16

TSS ..... 17 - 25

Information about TST grommets 26

Design-A-Flange ..... 27 - 37

Customer Unique Products ..... 38 - 39

The Company

Offices in Nässjö Sweden

Tapper Sealing Technology AB is one of the leading innovators in the cable and pipe entry market. We develop, manufacture and export innovative and flexible cable and pipe entry systems. The key focus of all our products is to offer added value to the end customer/user.

Tapper Sealing Technology (TST) started out as a manufacturing partner to Rutab, Sweden's leading supplier of cable and pipe entries. From the very beginning, our main focus has been innovative production techniques and products. Our offices and production facility are located in Nässjö, in south central Sweden – one of the country's major logistical centers.

Tapper Sealing Technology is ISO approved to ISO 9001 and ISO 14001.

TST is a family owned and managed company and has been so since it was founded.

Production

In line with our focus on innovation, we are continuously developing and investing in new, cutting edge production and mould technology. By pushing the boundaries of conventional production and mould technology, TST has been able to successfully manufacture and market quality products offering added benefits to the end user economically from our base in Sweden. One example of this effort is our RUTASEAL® rubber grommets, produced with a fully automated production technique for rubber items, developed entirely within our own company. Another example is KLIKSEAL®, a 2-component injection molded cable and pipe seal with cable anchorage, which also is produced with a completely automated production technique developed within the company. The TSS is designed to replace cheaper and simpler sealing products available on the market. It is a very flexible end-plug/grommet for all applications, with several beneficial features not available in competitor products. It is produced using techniques previously unique to rubber manufacturing. Design-A-Flange is the latest example of advanced production technique in a new and innovative product.

Offices in Nässjö Sweden

Warehouse - and production facility in Nässjö, Sweden

Production facility in Nässjö, Sweden

KLIKSEAL®

KLIKSEAL® *is a revolutionary two-component grommet with cable anchorage – something completely new to the market. Through innovation and advanced production technology, we have designed a product that has many of the advantages found in a cable gland.*

Apart from the cable anchorage, ***KLIKSEAL®*** *is compact, self-adjusting to its surrounding wall thickness, click-fixed in place, has a membrane seal, is waterproof, requires very little effort to install with its collapsible outer membrane, and saves up to 90% of your time.*

The installation of a ***KLIKSEAL®*** *requires no tools and has a "pushout" membrane that is a permanent seal until penetrated by a cable or pipe. Each size of* ***KLIKSEAL®*** *can be used with a large range of cable and pipe diameters. An M25 can be used for cables and pipes ranging from 4 mm to 13 mm. Because of its compact design, the* ***KLIKSEAL®*** *only extends 5,5 mm outside the housing on which it is mounted.*

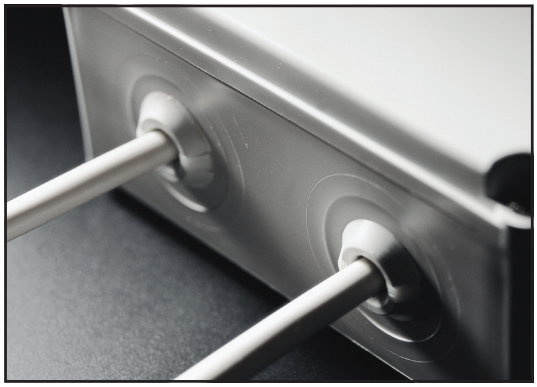

	KLIK SEAL®	PE IP68	RUTA-SEAL®	TSS
Tension relief	✓	✓	✗	✗
Waterproof installation	✓	✓	✓	✓
"Pushout" membrane	✓	✗	✓	✓
Ergonomic installation	✓	✗	✓	✓
Same protrusion regardless of size	✓	✗	✗	✗
Can be installed from one side	✓	✗	✓	✓
Locks in place	✓	✓	✗	✗
Designed for threaded holes	✗	✓	✗	✗
Self-adjusting to wall thickness	✓	✗	✓	✓
Self-adjustment to cable diameter	✓	✗	✓	✓
Re-usable	✓	✓	✓	✓
Space saving	✓	✗	✓	✓
Time saving installation	✓	✗	✓	✓

Product Benefits

Cable Anchorage
KLIKSEAL® is tested and certified to Cable Anchorage Type A - the same standard most cable glands are approved to.

Compact design
Designed to blend in with its surrounding.
Product thickness is only 17-20mm, with a protrusion of 5,5 mm on the outside (M20-M25). A cable gland has a protrusion of 30-40mm.

Klik
KLIKSEAL® is an ergonomic product that requires no torque or force during installation. It simply “kliks” into place.

Selfadjusting to wall thickness
The ability to selfadjust to the wall thickness means there is no need for a lock-nut to install a **KLIKSEAL®**.

Fixed in place
When a **KLIKSEAL®** has been installed it is fixed in both directions like a cable gland and cannot be removed unintentionally.

IP67 = water tight
KLIKSEAL® is water and dust proof, which means that you do not need to worry if you have chosen the right protection class.

”Pushout” membrane
KLIKSEAL® is equipped with a ”Pushout” membrane which means the opening is sealed until the membrane is pushed out. This means it will protect against dust and moisture even if a cable has not been installed.

Rubber coated tension relief for protection of the cable mantle
To avoid possible damage to the mantle of cables installed in a **KLIKSEAL®** the arms providing cable anchorage are coated with TPE. TPE is a plastic material with a “rubbery” texture that works as a protection between the harder plastic and the cable mantle. It also provides dampening against vibration.

Save up to 90% on installation time.
KLIKSEAL® is a superior economic solution as it saves up to 90% on the complete installation time.

Ergonomic installation without tools
Center the **KLIKSEAL®** in the opening, push with both thumbs until it “kliks” into position. Install the cable by pushing it through the grommet.

Product features TKS KLIKSEAL®

Height of only 17-20 mm, 5,5 mm on the outside. Cable glands are approx. 30-40 mm.

Handles large range of cable and pipe diameters.

Installation time saving of up to 90%.

Self-adjusting to wall thickness.

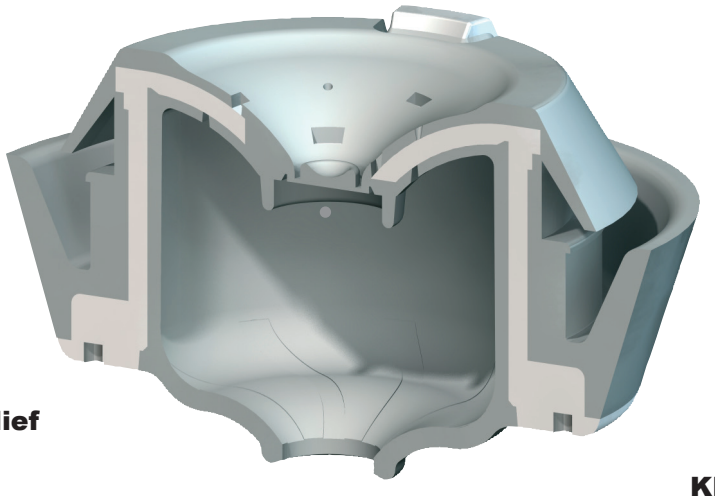

Ergonomic installation.

”Pushout” membrane

Fixed in both directions when mounted.

Space saving design

Integrated tension relief

KLIK = No material compression during installation.

IP67

Rubber coated tension relief for protection of the cable mantle.

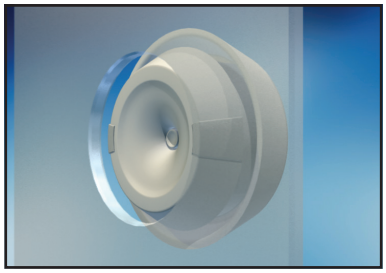

Center the KLIKSEAL in the opening (from the inside), push evenly with both thumbs until it ”kliks” into place.

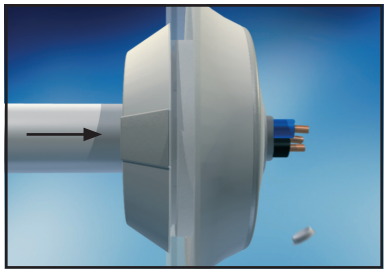

Insert the cable from the side with the polyamide tabs.

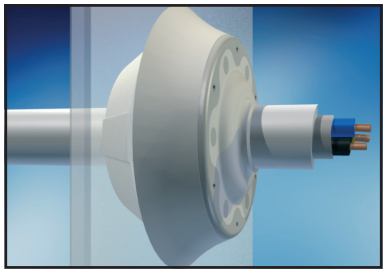

Note! KLIKSEAL® is installed from the inside.

KLIKSEAL®

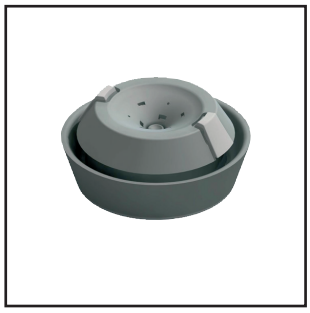

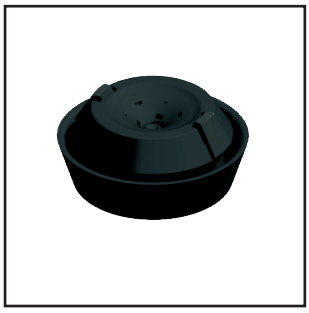

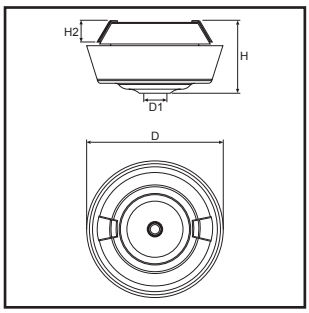

Material	TPE and Polyamide 66 - Halogen Free UL listed material
Mode of protection	IP67 / IP65
Temperature range	-20ºC....+125ºC (1)
Test standard	EN60529:1991 + A1 EN50262:1998 + A1+A2
Semko report	1111146 + 606620

- Integrated cable anchorage
- Fixed in both directions when mounted
- Space saving design
- Very quick and simple installation without the use of tools

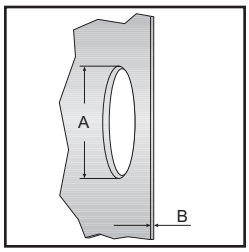

Product number	Size	IP67 and Cable Anchorage Type A* for Cable Ø mm	IP65 for Cable Ø mm	A mm	B for IP67/65 mm	H mm	H2 mm	D1 mm	D*** mm	Pcs pack	
RAL 7035											
T_14 758 03	M20	7 - 11	4 - 11	20,5	2 - 5	17 - 20	5,5	4,0	29,3 - 34,5	50	2000
T_14 758 04	M25	7 - 13**	4 - 13	25,5	2 - 5	17 - 20	5,5	5,0	34,3 - 40,0	50	1500
RAL 9005											
T_14 758 13	M20	7 - 11	4 - 11	20,5	2 - 5	17 - 20	5,5	4,0	29,3 - 34,5	50	2000
T_14 758 14	M25	7 - 13**	4 - 13	25,5	2 - 5	17 - 20	5,5	5,0	34,3 - 40,0	50	1500
RAL 9010											
T_14 758 23	M20	7 - 11	4 - 11	20,5	2 - 5	17 - 20	5,5	4,0	29,3 - 34,5	50	2000
T_14 758 24	M25	7 - 13**	4 - 13	25,5	2 - 5	17 - 20	5,5	5,0	34,3 - 40,0	50	1500
RAL XYZ											
TKS M20 XYZ	M20	7 - 11	4 - 11	20,5	2 - 5	17 - 20	5,5	4,0	29,3 - 34,5	50	2000
TKS M25 XYZ	M25	7 - 13**	4 - 13	25,5	2 - 5	17 - 20	5,5	5,0	34,3 - 40,0	50	1500

** Cable Anchorage Type A, according to EN 50262.*

*** 8,1 - 8,9 mm only approved for tension relief.*

**** Varies depending on the thickness of material installed in.*

(1) Unstressed material.

KLIKSEAL® for thin materials

Material	TPE and Polyamide 66 - Halogen Free UL listed material
Mode of protection	IP67 / IP65
Temperature range	-20ºC....+125ºC (1)
Test standard	EN60529:1991 + A1 EN50262:1998 EN60670-1:2005
Semko report	1000158

- Integrated cable anchorage
- Fixed in both directions when mounted
- Space saving design
- Very quick and simple installation without the use of tools

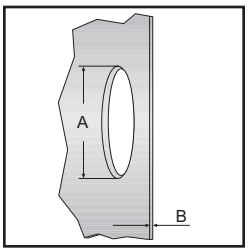

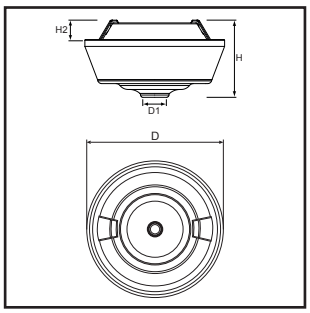

Product number	Size	IP67 and Cable Anchorage Type A* for Cable Ø mm	IP65 for Cable Ø mm	A mm	B for IP67/65 mm	H mm	H2 mm	D1 mm	D*** mm	Pcs pack	
RAL 7035											
T_14 758 07	M20	7 - 11	4 - 11	20,5	0,5 - 3	17 - 20	5,5	4,0	34,2 - 37,2	50	2000
T_14 758 08	M25	7 - 13**	4 - 13	25,5	0,9 - 3	17 - 20	5,5	5,0	39,2 - 42,2	50	1500
RAL 9005											
T_14 758 17	M20	7 - 11	4 - 11	20,5	0,5 - 3	17 - 20	5,5	4,0	34,2 - 37,2	50	2000
T_14 758 18	M25	7 - 13**	4 - 13	25,5	0,9 - 3	17 - 20	5,5	5,0	39,2 - 42,2	50	1500
RAL 9010											
T_14 758 27	M20	7 - 11	4 - 11	20,5	0,5 - 3	17 - 20	5,5	4,0	34,2 - 37,2	50	2000
T_14 758 28	M25	7 - 13**	4 - 13	25,5	0,9 - 3	17 - 20	5,5	5,0	39,2 - 42,2	50	1500
RAL XYZ											
TKST M20 XYZ	M20	7 - 11	4 - 11	20,5	0,5 - 3	17 - 20	5,5	4,0	34,2 - 37,2	50	2000
TKST M25 XYZ	M25	7 - 13**	4 - 13	25,5	0,9 - 3	17 - 20	5,5	5,0	39,2 - 42,2	50	1500

** Cable Anchorage Type A, according to EN 50262.*

*** 8,1 - 8,9 mm only approved for tension relief.*

**** Varies depending on the thickness of material installed in.*

(1) Unstressed material.

Examples of applications for KLIKSEAL®

Enclosures and Cabinets

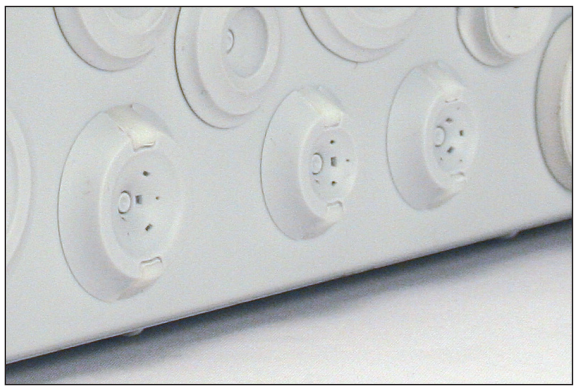

Light fixtures

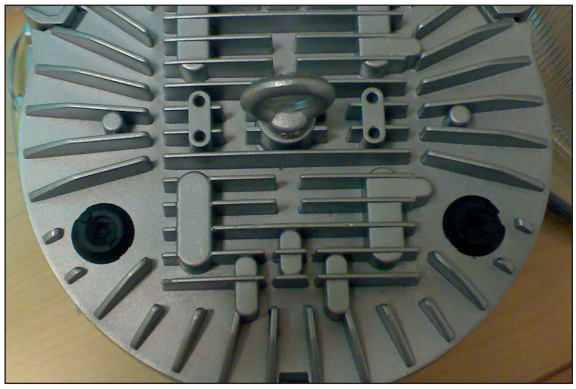

RUTASEAL® Rubber Grommets

RUTASEAL® *is very simple to use and demands no tools, which in turn means lower work cost. It requires no screw-driver or scissors to make the hole, which otherwise would endanger the IP-class seal.* ***RUTASEAL®*** *is SEMKO tested for IP67 internally and externally. The chloroprene version is also DNV approved.* ***RUTASEAL®*** *is produced in EPDM and Chloroprene in both PG and Metric. The seals are produced in black, light grey and grey.* ***RUTASEAL®*** *has a very high finish and the automatic method of production guarantees the same even and high quality on all products at all times.*

Product features RUTASEAL® & RUTASEAL LIGHT®

IP Class: IP67 (external).

Both Metric and PG programmes.

”Pushout” membrane with 0,25 mm thickness.

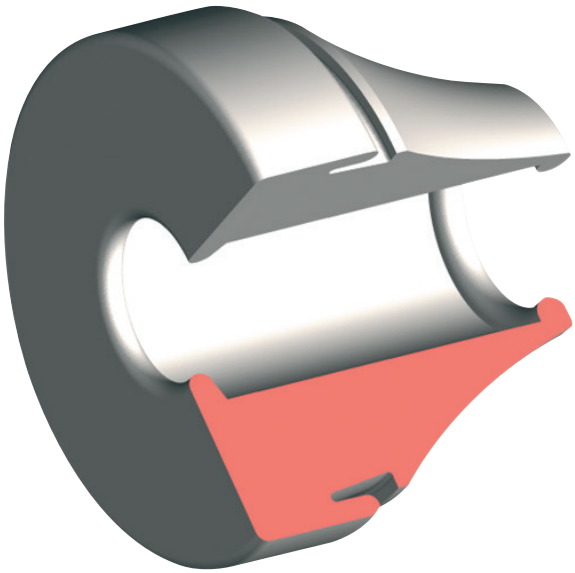

Internal / External holes IP67.

Internal / External holes IP67.

Produced in halogene-free EPDM or Chloroprene.

RUTASEAL can be assembled from either end depending upon the application.

Hardness:
60 ± 5 (Shore density).

Suits material thick-ness 0,5 - 4 mm both in plastic and metal.

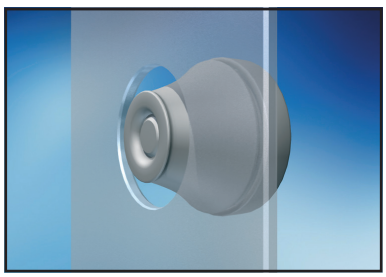

Push the grommet into the hole.

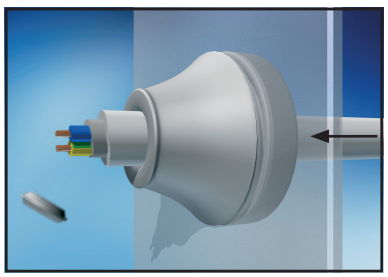

Pierce the grommet with the cable.

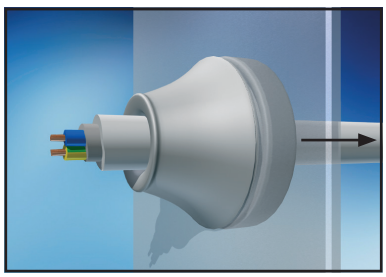

The grommet is then locked in position by pulling back on the cable..

RUTASEAL® EPDM Metric

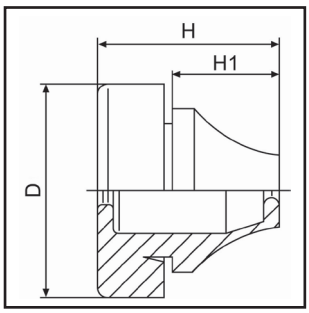

Material	EPDM - Halogen Free Resistant to chemicals and weatherproof.
Mode of protection	IP67
Temperature range	-40ºC....+110ºC (1)
Test standard	EN60670-1:2005+A1:2013
Semko report	1301727 (M12-M50), 1612391 (M63) 1122298 (M12F, M16F)

- Quick and simple assembly without the use of tools
- Can be assembled from either end depending on application
- "Pushout" membrane

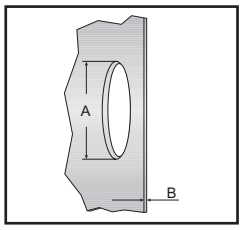

Product number	Size	For cable/ pipe Ø mm	A mm	B mm	D mm	H mm	H1 mm	Pcs pack	
RAL 7001									
T_14 582 33	M12	4 - 7	12,5	0,5 - 2	20	12,7	5,4	50	4000
T_14 582 33-F	M12	4 - 7	12,5	2 - 5	20	12,7	5,4	50	4000
T_14 582 34	M16	5 - 9	16,5	1 - 4	21	18	10,5	50	4000
T_14 582 34-F	M16	5 - 9	16,5	2 - 5	21	18	10,5	50	4000
T_14 582 35	M20	8 - 13	20,5	1 - 4	25,5	20	12,7	50	2000
T_14 582 36	M25	11 - 17	25,5	1 - 4	30,5	21,6	14,5	50	1500
T_14 582 37	M32	15 - 20	32,5	1 - 4	38,5	24,8	17,5	25	1000
T_14 582 38	M40	19 - 28	40,5	1 - 4	48,5	30	20,4	25	400
T_14 582 39	M50	27 - 35	50,5	1 - 4	60,5	35	23,9	10	250
T_14 582 40	M63	34 - 45	63,5	1 - 4	73,5	40	28,9	5	125
RAL 9005									
T_14 582 93	M12	4 - 7	12,5	0,5 - 2	20	12,7	5,4	50	4000
T_14 582 93-F	M12	4 - 7	12,5	2 - 5	20	12,7	5,4	50	4000
T_14 582 94	M16	5 - 9	16,5	1 - 4	21	18	10,5	50	4000
T_14 582 94-F	M16	5 - 9	16,5	2 - 5	21	18	10,5	50	4000
T_14 582 95	M20	8 - 13	20,5	1 - 4	25,5	20	12,7	50	2000
T_14 582 96	M25	11 - 17	25,5	1 - 4	30,5	21,6	14,5	50	1500
T_14 582 97	M32	15 - 20	32,5	1 - 4	38,5	24,8	17,5	25	1000
T_14 582 98	M40	19 - 28	40,5	1 - 4	48,5	30	20,4	25	400
T_14 582 99	M50	27 - 35	50,5	1 - 4	60,5	35	23,9	10	250
T_14 583 00	M63	34 - 45	63,5	1 - 4	73,5	40	28,9	5	125
RAL 7035									
T_14 583 03	M12	4 - 7	12,5	0,5 - 2	20	12,7	5,4	50	4000
T_14 583 03-F	M12	4 - 7	12,5	2 - 5	20	12,7	5,4	50	4000
T_14 583 04	M16	5 - 9	16,5	1 - 4	21	18	10,5	50	4000
T_14 583 04-F	M16	5 - 9	16,5	2 - 5	21	18	10,5	50	4000
T_14 583 05	M20	8 - 13	20,5	1 - 4	25,5	20	12,7	50	2000
T_14 583 06	M25	11 - 17	25,5	1 - 4	30,5	21,6	14,5	50	1500
T_14 583 07	M32	15 - 20	32,5	1 - 4	38,5	24,8	17,5	25	1000
T_14 583 08	M40	19 - 28	40,5	1 - 4	48,5	30	20,4	25	400
T_14 583 09	M50	27 - 35	50,5	1 - 4	60,5	35	23,9	10	250
T_14 583 37	M63	34 - 45	63,5	1 - 4	73,5	40	28,9	5	125

(1) Unstressed material.

RUTASEAL® Chloroprene Metric

Material	Chloroprene Resistant to chemicals, ageing and weatherproof.
Mode of protection	IP67
Temperature range	-30ºC....+100ºC (1)
Test standard	EN60670-1:2005+A1:2013
Semko report	1612391 (M12-M50), 1123937 (M63), 1507433 (M12F, M16F)
DNV report	E-12700

- Quick and simple assembly without the use of tools
- Can be assembled from either end depedning on application
- ”Pushout” membrane

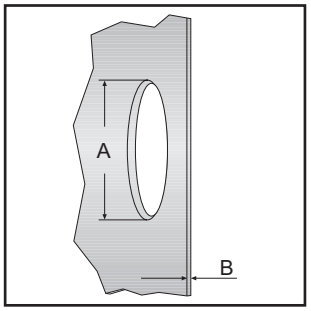

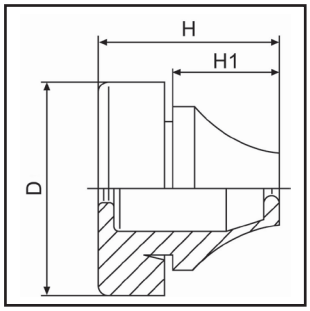

Product number	Size	For cable/ pipe Ø mm	A mm	B mm	D mm	H mm	H1 mm	Pcs pack	
RAL 9005									
T_14 582 53	M12	4 - 7	12,5	0,5 - 2	20	12,7	5,4	50	4000
T_14 582 53-F	M12	4 - 7	12,5	2 - 5	20	12,7	5,4	50	4000
T_14 582 54	M16	5 - 9	16,5	1 - 4	21	18	10,5	50	4000
T_14 582 54-F	M16	5 - 9	16,5	2 - 5	21	18	10,5	50	4000
T_14 582 55	M20	8 - 13	20,5	1 - 4	25,5	20	12,7	50	2000
T_14 582 56	M25	11 - 17	25,5	1 - 4	30,5	21,6	14,5	50	1500
T_14 582 57	M32	15 - 20	32,5	1 - 4	38,5	24,8	17,5	25	1000
T_14 582 58	M40	19 - 28	40,5	1 - 4	48,5	30	20,4	25	400
T_14 582 59	M50	27 - 35	50,5	1 - 4	60,5	35	23,9	10	250
T_14 582 60	M63	34 - 45	63,5	1 - 4	73,5	40	28,9	5	125

(1) Unstressed material.

RUTASEAL LIGHT® EPDM Metric

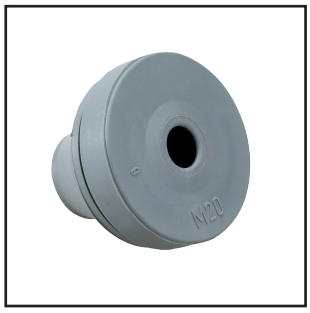

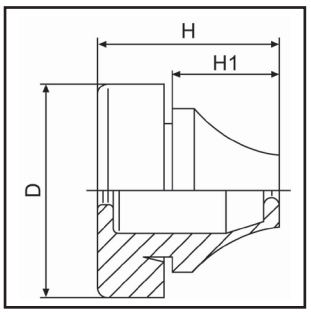

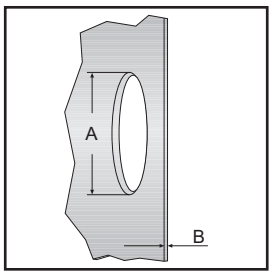

Material	EPDM - Halogen Free Resistant to chemicals and weatherproof.
Mode of protection	IP67
Temperature range	-40ºC....+110ºC (1)
Test standard	EN 60670-1:2005+A1:2013
Semko report	1313520

- Quick and simple assembly without the use of tools
- Can be assembled from either end depedning on application
- Less material makes it easier to install, as well as pull out
- ”Pushout” membrane

Product number	Size	For cable/ pipe Ø mm	A mm	B mm	D mm	H mm	H1 mm	Pcs pack	
RAL 7001									
T_14 583 26	M16	5 - 9	16,5	1 - 4	21	18	11	50	4000
T_14 583 27	M20	8 - 12	20,5	1 - 4	25,5	20	13,4	50	2000
T_14 583 28	M25	11 - 16	25,5	1 - 4	30,5	21,6	15,3	50	1500
RAL 9005									
T_14 583 30	M16	5 - 9	16,5	1 - 4	21	18	11	50	4000
T_14 583 31	M20	8 - 12	20,5	1 - 4	25,5	20	13,4	50	2000
T_14 583 32	M25	11 - 16	25,5	1 - 4	30,5	21,6	15,3	50	1500
RAL 7035									
T_14 583 34	M16	5 - 9	16,5	1 - 4	21	18	11	50	4000
T_14 583 35	M20	8 - 12	20,5	1 - 4	25,5	20	13,4	50	2000
T_14 583 36	M25	11 - 16	25,5	1 - 4	30,5	21,6	15,3	50	1500

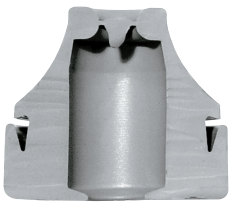

RUTASEAL®

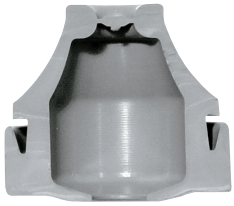

RUTASEAL LIGHT®

RUTASEAL LIGHT® was originally designed for strip lighting manufacturers and similar applications. Less material makes it lighter and easier to install, while providing IP67 protection. At the same time it is also easier to pull it out of the opening.

(1) Unstressed material.

Material	EPDM - Halogen Free Resistant to chemicals and weatherproof.
Mode of protection	IP67
Temperature range	-40ºC....+110ºC (1)
Test standard	EN 60670-1:2005+A1:2013
Semko report	1612391

- Quick and simple assembly without the use of tools
- Can be assembled from either end depending on application
- ”Pushout” membrane

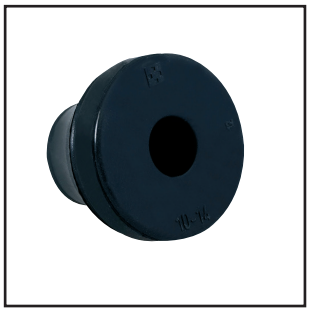

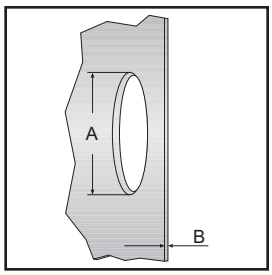

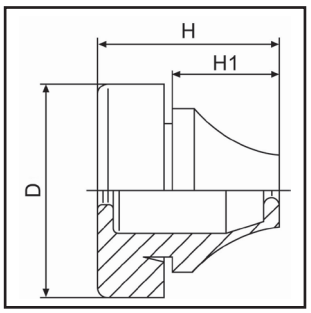

Product number	Size	For cable/ pipe Ø mm	A mm	B mm	D mm	H mm	H1 mm	Pcs pack	
RAL 7001									
T_14 582 20	PG7	3 - 5	13	0,5 - 2	20	12,7	5,4	50	4000
T_14 582 21	PG9	5 - 7	16	1 - 4	21	18	10,3	50	4000
T_14 582 22	PG11	7 - 10	19	1 - 4	24	20	12,7	50	2000
T_14 582 23	PG16	10 - 14	23	1 - 4	28	21,6	14,7	50	1500
T_14 582 24	PG21	14 - 20	29	1 - 4	35	24,8	17,6	25	1000
T_14 582 25	PG29	20 - 26	38	1 - 4	46	28,5	20	25	400
T_14 582 26	PG36	26 - 35	48	1 - 4	58	35	23,9	10	250
RAL 9005									
T_RS-PG7S	PG7	3 - 5	13	0,5 - 2	20	12,7	5,4	50	4000
T_RS-PG9S	PG9	5 - 7	16	1 - 4	21	18	10,3	50	4000
T_RS-PG11S	PG11	7 - 10	19	1 - 4	24	20	12,7	50	2000
T_RS-PG16S	PG16	10 - 14	23	1 - 4	28	21,6	14,7	50	1500
T_RS-PG21S	PG21	14 - 20	29	1 - 4	35	24,8	17,6	25	1000
T_RS-PG29S	PG29	20 - 26	38	1 - 4	46	28,5	20	25	400
T_RS-PG36S	PG36	26 - 35	48	1 - 4	58	35	23,9	10	250
RAL 7035									
T_14 582 12	PG7	3 - 5	13	0,5 - 2	20	12,7	5,4	50	4000
T_14 582 13	PG9	5 - 7	16	1 - 4	21	18	10,3	50	4000
T_14 582 14	PG11	7 - 10	19	1 - 4	24	20	12,7	50	2000
T_14 582 15	PG16	10 - 14	23	1 - 4	28	21,6	14,7	50	1500
T_14 582 16	PG21	14 - 20	29	1 - 4	35	24,8	17,6	25	1000
T_14 582 17	PG29	20 - 26	38	1 - 4	46	28,5	20	25	400
T_14 582 18	PG36	26 - 35	48	1 - 4	58	35	23,9	10	250

(1) Unstressed material.

RUTASEAL® Chloroprene PG

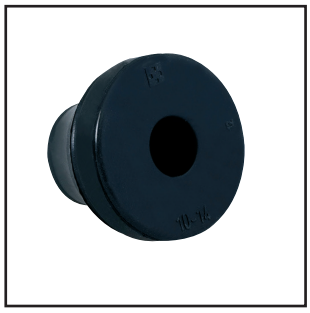

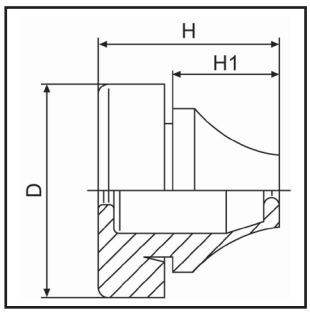

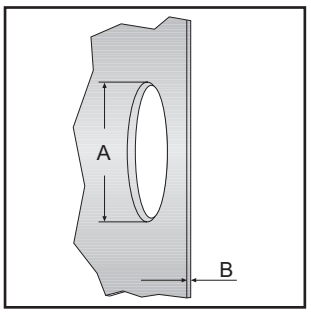

Material	Chloroprene Resistant to chemicals, ageing and weatherproof.
Mode of protection	IP67
Temperature range	-30ºC....+100ºC (1)
Test standard	EN 60670-1:2005+A1:2013
Semko report	1612391, 112937 (M63)
DNV report	E-12700

- Quick and simple assembly without the use of tools
- Can be assembled from either end depending on application
- ”Pushout” membrane

Product number	Size	For cable/ pipe Ø mm	A mm	B mm	D mm	H mm	H1 mm	Pcs pack	
RAL 9005									
T_14 582 42	PG7	3 - 5	13	0,5 - 2	20	12,7	5,4	50	4000
T_14 582 43	PG9	5 - 7	16	1 - 4	21	18	10,3	50	4000
T_14 582 44	PG11	7 - 10	19	1 - 4	24	20	12,7	50	2000
T_14 582 45	PG16	10 - 14	23	1 - 4	28	21,6	14,7	50	1500
T_14 582 46	PG21	14 - 20	29	1 - 4	35	24,8	17,6	25	1000
T_14 582 47	PG29	20 - 26	38	1 - 4	46	28,5	20	25	400
T_14 582 48	PG36	26 - 35	48	1 - 4	58	35	23,9	10	250

(1) Unstressed material.

TSS
*The **TSS** is the latest addition to the TST grommet range.*

*What makes the **TSS** different from existing products on the market are the built-in features that you do not find in this otherwise relatively simple product.*

***TSS** handles an exceptionally large cable span.*

It is the only "simple" grommet manufactured in a rubber-like material, and the only TPE-based end-plug.

*With the **"pushout" membrane** you always have a round opening and are guaranteed to have IP67.*

*The **TSS** is equipped with a sock that closes tight around the cable and allows for it to be moved around like a **"joy-stick"** in the opening without endangering the IP-classification. So it works extremely well with cables passing through at an angle.*

The design makes sure that the grommet stays in place, even when large cables are installed.

*These are some of the features that creates a lot of value added in the **TSS**, and makes it a unique product.*

***TSS** is also available in a Multi-version for up to three cables and in V0-rated material.*

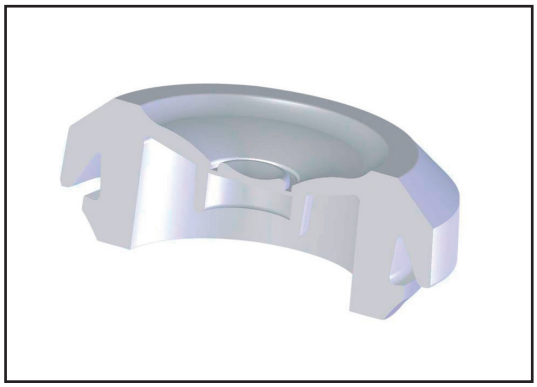

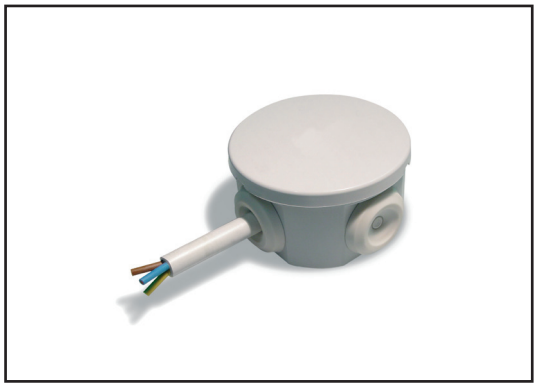

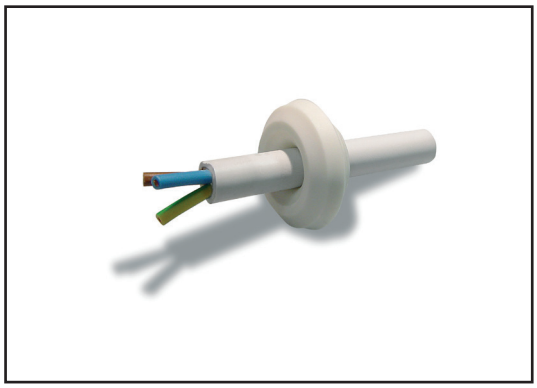

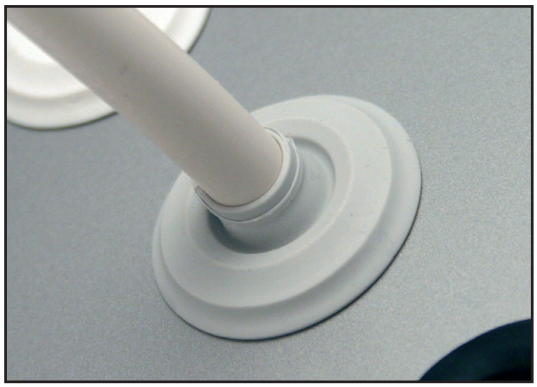

Product features TSS

Ergonomic installation.

End-plug/grommet for all applications.

Self-adjusting to cable diameter.

Both Metric and PG programmes. Also available in V0 and Multi-versions.

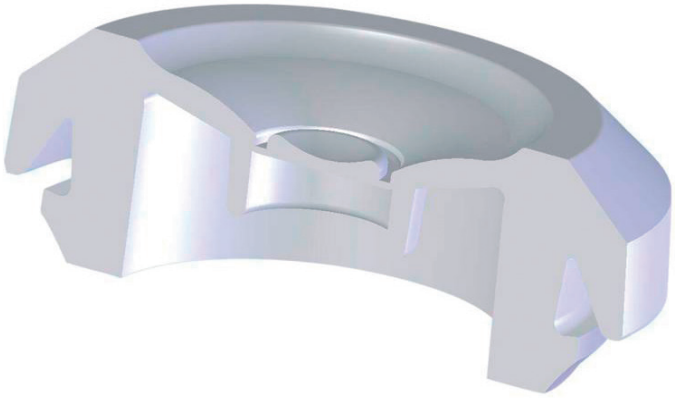

Significant timesaving.

IP67 = Waterproof.

Handles exceptionally large cable-span 5 - 31 mm.

Secure installation in opening.

Suits material thickness 0,5 – 4,5 mm.

Easy and fast installation.

Temperature range -50°C....+125°C.

”Joy-stick” effect thanks to built-in sock.

”Pushout” membrane.

Not for temporary use.

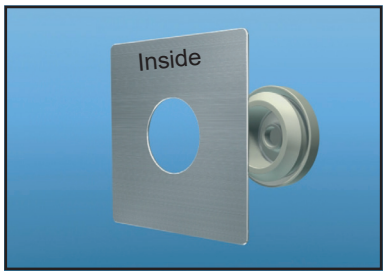

Push the grommet into the hole.

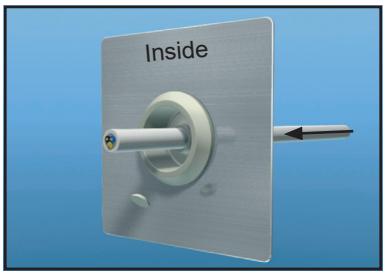

Pierce the grommet with the cable.

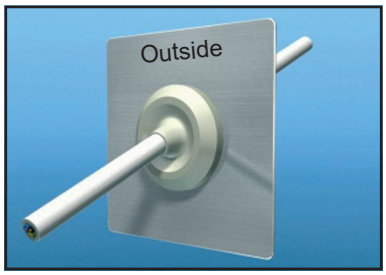

Material	TPE - Thermoplastic Elastomer Halogen Free UL listed material
Mode of protection	IP67
Temperature range	-50ºC....+125ºC (1)
Test standard	EN 60670-1:2005+A1:2013
Semko report	1612393

- Quick and simple assembly without the use of tools
- Handles exceptionally large cable span
- An end-plug for all applications

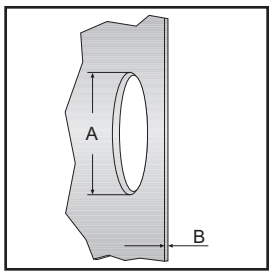

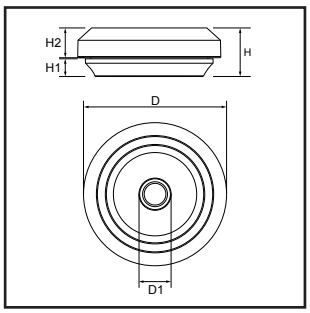

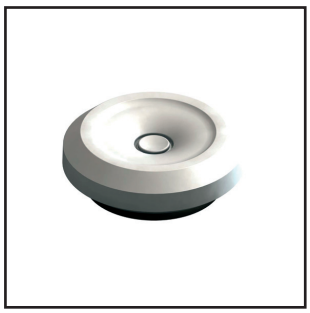

Product number	Size	For cable/ pipe Ø mm	A mm	B mm	D* mm	D1 mm	H mm	H1 mm	H2* mm	Pcs pack	
RAL 7035											
T_14 757 11	M16	5 - 10	16,5	0,5 - 3	23,5	4	11	4	6,75	50	4000
T_14 757 12	M20	6 - 13	20,5	0,5 - 3	27,5	5	11	4	6,75	50	3500
T_14 757 13	M25	8 - 17	25,5	0,5 - 3,5	32,5	7	11	4	6,75	50	2500
T_14 757 14	M32	12 - 24	32,5	0,5 - 4,5	39,5	11	11	4	6,75	25	1500
T_14 757 15	M40	19 - 31	40,5	1,5 - 4,5	47,5	18	13,5	4,84	7,41	25	1000
RAL 9005											
T_14 757 16	M16	5 - 10	16,5	0,5 - 3	23,5	4	11	4	6,75	50	4000
T_14 757 17	M20	6 - 13	20,5	0,5 - 3	27,5	5	11	4	6,75	50	3500
T_14 757 18	M25	8 - 17	25,5	0,5 - 3,5	32,5	7	11	4	6,75	50	2500
T_14 757 19	M32	12 - 24	32,5	0,5 - 4,5	39,5	11	11	4	6,75	25	1500
T_14 757 20	M40	19 - 31	40,5	1,5 - 4,5	47,5	18	13,5	4,84	7,41	25	1000
RAL 9010											
T_14 757 21	M16	5 - 10	16,5	0,5 - 3	23,5	4	11	4	6,75	50	4000
T_14 757 22	M20	6 - 13	20,5	0,5 - 3	27,5	5	11	4	6,75	50	3500
T_14 757 23	M25	8 - 17	25,5	0,5 - 3,5	32,5	7	11	4	6,75	50	2500
T_14 757 24	M32	12 - 24	32,5	0,5 - 4,5	39,5	11	11	4	6,75	25	1500
T_14 757 25	M40	19 - 31	40,5	1,5 - 4,5	47,5	18	13,5	4,84	7,41	25	1000
RAL XYZ											
TSS M16 XYZ	M16	5 - 10	16,5	0,5 - 3	23,5	4	11	4	6,75	50	4000
TSS M20 XYZ	M20	6 - 13	20,5	0,5 - 3	27,5	5	11	4	6,75	50	3500
TSS M25 XYZ	M25	8 - 17	25,5	0,5 - 3,5	32,5	7	11	4	6,75	50	2500
TSS M32 XYZ	M32	12 - 24	32,5	0,5 - 4,5	39,5	11	11	4	6,75	25	1500
TSS M40 XYZ	M40	19 - 31	40,5	1,5 - 4,5	47,5	18	13,5	4,84	7,41	25	1000

** Varies depending on the thickness of material installed in.*

(1) Unstressed material.

TSS PG

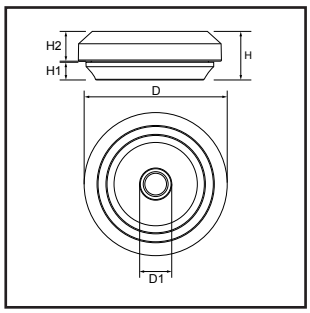

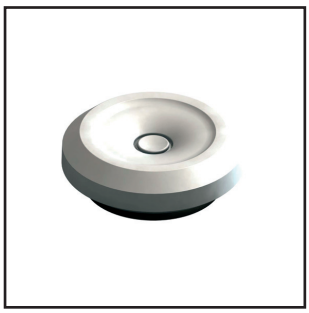

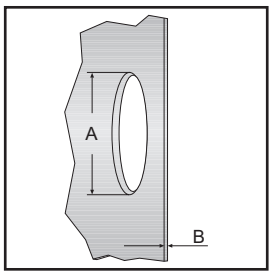

Material	TPE - Thermoplastic Elastomer Halogen Free UL listed material
Mode of protection	IP67
Temperature range	-50ºC....+125ºC (1)
Test standard	EN 60670-1:2005+A1:2013
Semko report	1612393

- Quick and simple assembly without the use of tools
- Handles exceptionally large cable span
- An end-plug for all applications

Product number	Size	For cable/ pipe Ø mm	A mm	B mm	D* mm	D1 mm	H mm	H1 mm	H2* mm	Pcs pack	
RAL 7035											
T_14 757 32	PG9	5 - 10	16	0,5 - 3	24	4	11	4	6,75	50	4000
T_14 757 33	PG11	6 - 12	19	0,5 - 3	26	5	11	4	6,75	50	3500
T_14 757 34	PG16	8 - 15	23	0,5 - 3,5	30	7	11	4	6,75	50	2500
T_14 757 35	PG21	10 - 20	29	0,5 - 4,5	36	9	11	4	6,75	25	1500
T_14 757 36	PG29	18 - 27	38	1,5 - 4,5	45	17	13,5	4,84	7,41	25	1000
RAL 9005											
T_14 757 37	PG9	5 - 10	16	0,5 - 3	24	4	11	4	6,75	50	4000
T_14 757 38	PG11	6 - 12	19	0,5 - 3	26	5	11	4	6,75	50	3500
T_14 757 39	PG16	8 - 15	23	0,5 - 3,5	30	7	11	4	6,75	50	2500
T_14 757 40	PG21	10 - 20	29	0,5 - 4,5	36	9	11	4	6,75	25	1500
T_14 757 41	PG29	18 - 27	38	1,5 - 4,5	45	17	13,5	4,84	7,41	25	1000
RAL 9010											
T_14 757 42	PG9	5 - 10	16	0,5 - 3	24	4	11	4	6,75	50	4000
T_14 757 43	PG11	6 - 12	19	0,5 - 3	26	5	11	4	6,75	50	3500
T_14 757 44	PG16	8 - 15	23	0,5 - 3,5	30	7	11	4	6,75	50	2500
T_14 757 45	PG21	10 - 20	29	0,5 - 4,5	36	9	11	4	6,75	25	1500
T_14 757 46	PG29	18 - 27	38	1,5 - 4,5	45	17	13,5	4,84	7,41	25	1000
RAL XYZ											
TSS PG9 XYZ	PG9	5 - 10	16	0,5 - 3	24	4	11	4	6,75	50	4000
TSS PG11 XYZ	PG11	6 - 12	19	0,5 - 3	26	5	11	4	6,75	50	3500
TSS PG16 XYZ	PG16	8 - 15	23	0,5 - 3,5	30	7	11	4	6,75	50	2500
TSS PG21 XYZ	PG21	10 - 20	29	0,5 - 4,5	36	9	11	4	6,75	25	1500
TSS PG29 XYZ	PG29	18 - 27	38	1,5 - 4,5	45	17	13,5	4,84	7,41	25	1000

** Varies depending on the thickness of material installed in.*

(1) Unstressed material.

Material	TPE - Thermoplastic Elastomer Halogen Free UL listed material
Mode of protection	IP67
Temperature range	-50ºC....+125ºC (1)
Test standard	EN 60670-1:2005+A1:2013
Semko report	1612393

- Quick and simple assembly without the use of tools
- Handles large cable span
- An end-plug for all applications

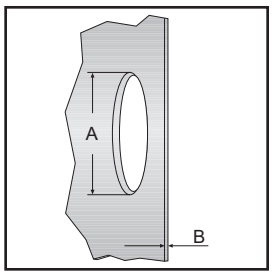

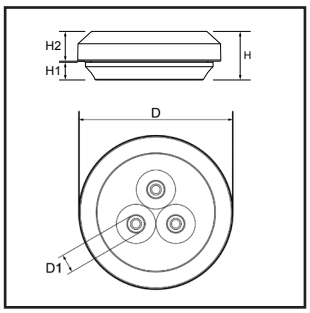

Product number	Size	For cable/ pipe Ø mm	A mm	B mm	D* mm	D1 mm	H mm	H1 mm	H2* mm	Pcs pack	
RAL 7035											
T_14 757 26	M20	3x 4 - 7	20,5	0,5 - 3	27,5	3	11	4	6,75	50	3500
T_14 757 27	M25	3x 4 - 9	25,5	0,5 - 3,5	32,5	3	11	4	6,75	50	2500
T_14 757 47	PG11	3x 4 - 6	19	0,5 - 3	26	3	11	4	6,75	50	3500
T_14 757 48	PG16	3x 4 - 8	23	0,5 - 3,5	30	3	11	4	6,75	50	2500
RAL 9005											
T_14 757 28	M20	3x 4 - 7	20,5	0,5 - 3	27,5	3	11	4	6,75	50	3500
T_14 757 29	M25	3x 4 - 9	25,5	0,5 - 3,5	32,5	3	11	4	6,75	50	2500
T_14 757 49	PG11	3x 4 - 6	19	0,5 - 3	26	3	11	4	6,75	50	3500
T_14 757 50	PG16	3x 4 - 8	23	0,5 - 3,5	30	3	11	4	6,75	50	2500
RAL 9010											
T_14 757 30	M20	3x 4 - 7	20,5	0,5 - 3	27,5	3	11	4	6,75	50	3500
T_14 757 31	M25	3x 4 - 9	25,5	0,5 - 3,5	32,5	3	11	4	6,75	50	2500
T_14 757 51	PG11	3x 4 - 6	19	0,5 - 3	26	3	11	4	6,75	50	3500
T_14 757 52	PG16	3x 4 - 8	23	0,5 - 3,5	30	3	11	4	6,75	50	2500
RAL XYZ											
TSS MULTI M20 XYZ	M20	3x 4 - 7	20,5	0,5 - 3	27,5	3	11	4	6,75	50	3500
TSS MULTI M25 XYZ	M25	3x 4 - 9	25,5	0,5 - 3,5	32,5	3	11	4	6,75	50	2500
TSS MULTI PG11 XYZ	PG11	3x 4 - 6	19	0,5 - 3	26	3	11	4	6,75	50	3500
TSS MULTI PG16 XYZ	PG16	3x 4 - 8	23	0,5 - 3,5	30	3	11	4	6,75	50	2500

** Varies depending on the thickness of material installed in.*

(1) Unstressed material.

Flammability Classification

V - Vertical Burning
The test specimen length is 5” (127 mm) and width 0.5” (12.7 mm). The sheet to be tested cannot be more than 0.5” (12.7mm) thick. The sheet is fixed 1/4” from the upper end in a vertical position. A metal mesh covered with surgical cotton is positioned 12” (305 mm) beneath the test sheet. The flame of the burner used is adjusted so that it forms a 3/4” blue flame. The flame is directed from below at the lower edge of the plastic sheet at a distance of 3/8” (9.5 mm). The flame is applied for 10 seconds, after which it is removed. The burning time of the test specimen is recorded. Immediately the burning stops the flame is reapplied for 10 seconds. After removal of the flame the burning time and afterglow time is again noted. The entire test is carried out on five different test specimens.

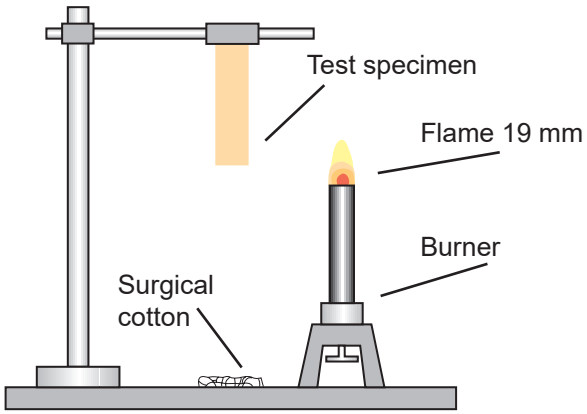

The material tested is **UL 94 V0** classified if:
1) None of the five test specimen burn for over 10 seconds at any time when the burner flame is removed.
2) The total burning time of the 10 ignition test does not exceed 50 seconds.
3) No test specimen burns either with a flame or afterglow to the clamp.
4) No burning drops should fall which would cause the cotton underneath to ignite from any test specimen.
5) The afterglow burning of no test specimen exceeds 30 seconds.

The material tested is **UL 94 V1** classified if:
1) None of the five test specimen burn for over 30 seconds at any time when the burner flame is removed.
2) The total burning time of the 10 ignition test does not exceed 250 seconds.
3) No test specimen burns either with a flame or afterglow to the clamp.
4) No burning drops should fall which would cause the cotton underneath to ignite from any test specimen.
5) The afterglow burning of no test specimen exceeds 60 seconds.

The material tested is **UL 94 V2** classified if:
1) None of the five test specimen burn for over 30 seconds at any time when the burner flame is removed.
2) The total burning time of the 10 ignition test does not exceed 250 seconds.
3) No test specimen burns either with a flame or afterglow to the clamp.
4) Only such burning pieces may fall from the test specimen, which burn only momentarily, and of which some ignite the cotton underneath.
5) The afterglow burning of no test specimen exceeds 60 seconds.

HB: slow burning on a horizontal specimen;
The test specimen length is 5” (125 mm) x Width 0,5” (13 mm) x Thickness -- typically 1/16” (1.5 mm) or 1/8” (3.0 mm) or 1/4” (6.0 mm).

Three specimen of each thickness are tested after conditioning for 48 hours at 23 degrees C and 50% RH. Each specimen is mounted with its long axis horizontal and its short axis at a 45 degree angle. Each specimen is marked with two lines, 1” (25mm) and 4” (100mm) from one end of the specimen. Each specimen is supported at one end so that its lower edge is 2/5” (10mm) above a piece of wire gauze. A 4/5” (20mm) high blue Bunsen burner flame is applied to the free end of the specimen for 30 seconds and then removed. If the specimen continues to burn after the flame is removed, the time for the flame front to travel between the two gauge marks is measured and the burning rate calculated in millimeters per minute

The material tested is **UL94 HB** if;
1) The burning rate < 3” (76 mm)/min for thickness < 3 mm
2) The burning stops before the 4” mark (100 mm)

Material	TPE V0 - Thermoplastic Elastomer Halogen Free UL listed material
Mode of protection	IP67
Temperature range	-40ºC....+80ºC (1)
Test standard	EN 60670-1:2005+A1:2013
Semko report	1612393

- Quick and simple assembly without the use of tools
- Handles exceptionally large cable span
- An end-plug for all applications
- Material is UL 94 V0 classified

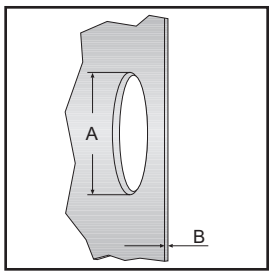

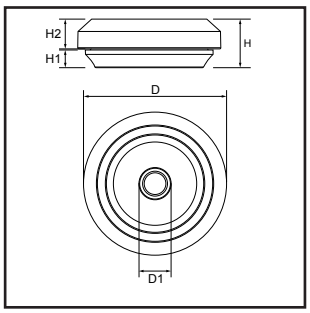

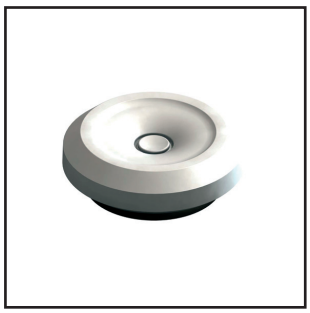

Product number	Size	For cable/ pipe Ø mm	A mm	B mm	D* mm	D1 mm	H mm	H1 mm	H2* mm	Pcs pack	
RAL 7035											
T_14 757 53	M16	5 - 10	16,5	0,5 - 3	23,5	4	11	4	6,75	50	4000
T_14 757 54	M20	6 - 13	20,5	0,5 - 3	27,5	5	11	4	6,75	50	3500
T_14 757 55	M25	8 - 17	25,5	0,5 - 3,5	32,5	7	11	4	6,75	50	2500
T_14 757 56	M32	12 - 24	32,5	0,5 - 4,5	39,5	11	11	4	6,75	25	1500
T_14 757 57	M40	19 - 31	40,5	1,5 - 4,5	47,5	18	13,5	4,84	7,41	25	1000
RAL 9005											
T_14 757 58	M16	5 - 10	16,5	0,5 - 3	23,5	4	11	4	6,75	50	4000
T_14 757 59	M20	6 - 13	20,5	0,5 - 3	27,5	5	11	4	6,75	50	3500
T_14 757 60	M25	8 - 17	25,5	0,5 - 3,5	32,5	7	11	4	6,75	50	2500
T_14 757 61	M32	12 - 24	32,5	0,5 - 4,5	39,5	11	11	4	6,75	25	1500
T_14 757 62	M40	19 - 31	40,5	1,5 - 4,5	47,5	18	13,5	4,84	7,41	25	1000
RAL 9010											
T_14 757 63	M16	5 - 10	16,5	0,5 - 3	23,5	4	11	4	6,75	50	4000
T_14 757 64	M20	6 - 13	20,5	0,5 - 3	27,5	5	11	4	6,75	50	3500
T_14 757 65	M25	8 - 17	25,5	0,5 - 3,5	32,5	7	11	4	6,75	50	2500
T_14 757 66	M32	12 - 24	32,5	0,5 - 4,5	39,5	11	11	4	6,75	25	1500
T_14 757 67	M40	19 - 31	40,5	1,5 - 4,5	47,5	18	13,5	4,84	7,41	25	1000
RAL XYZ											
TSS M16 XYZ	M16	5 - 10	16,5	0,5 - 3	23,5	4	11	4	6,75	50	4000
TSS M20 XYZ	M20	6 - 13	20,5	0,5 - 3	27,5	5	11	4	6,75	50	3500
TSS M25 XYZ	M25	8 - 17	25,5	0,5 - 3,5	32,5	7	11	4	6,75	50	2500
TSS M32 XYZ	M32	12 - 24	32,5	0,5 - 4,5	39,5	11	11	4	6,75	25	1500
TSS M40 XYZ	M40	19 - 31	40,5	1,5 - 4,5	47,5	18	13,5	4,84	7,41	25	1000

** Varies depending on the thickness of material installed in.*

(1) Unstressed material.

TSS PG V0

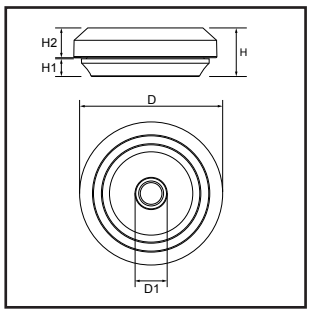

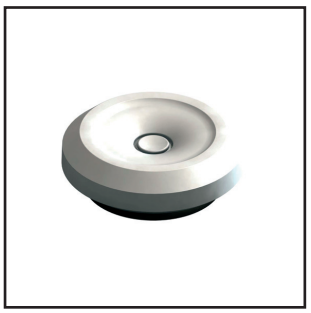

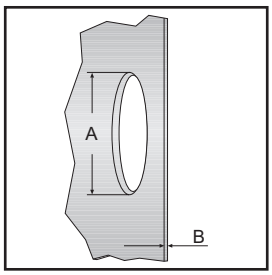

Material	TPE V0 - Thermoplastic Elastomer Halogen Free UL listed material
Mode of protection	IP67
Temperature range	-40ºC....+80ºC (1)
Test standard	EN 60670-1:2005+A1:2013
Semko report	1612393

- Quick and simple assembly without the use of tools
- Handles exceptionally large cable span
- An end-plug for all applications
- Material is UL 94 V0 classified

Product number	Size	For cable/ pipe Ø mm	A mm	B mm	D* mm	D1 mm	H mm	H1 mm	H2* mm	Pcs pack	
RAL 7035											
T_14 757 74	PG9	5 - 10	16	0,5 - 3	24	4	11	4	6,75	50	4000
T_14 757 75	PG11	6 - 12	19	0,5 - 3	26	5	11	4	6,75	50	3500
T_14 757 76	PG16	8 - 15	23	0,5 - 3,5	30	7	11	4	6,75	50	2500
T_14 757 77	PG21	10 - 20	29	0,5 - 4,5	36	9	11	4	6,75	25	1500
T_14 757 78	PG29	18 - 27	38	1,5 - 4,5	45	17	13,5	4,84	7,41	25	1000
RAL 9005											
T_14 757 79	PG9	5 - 10	16	0,5 - 3	24	4	11	4	6,75	50	4000
T_14 757 80	PG11	6 - 12	19	0,5 - 3	26	5	11	4	6,75	50	3500
T_14 757 81	PG16	8 - 15	23	0,5 - 3,5	30	7	11	4	6,75	50	2500
T_14 757 82	PG21	10 - 20	29	0,5 - 4,5	36	9	11	4	6,75	25	1500
T_14 757 83	PG29	18 - 27	38	1,5 - 4,5	45	17	13,5	4,84	7,41	25	1000
RAL 9010											
T_14 757 84	PG9	5 - 10	16	0,5 - 3	24	4	11	4	6,75	50	4000
T_14 757 85	PG11	6 - 12	19	0,5 - 3	26	5	11	4	6,75	50	3500
T_14 757 86	PG16	8 - 15	23	0,5 - 3,5	30	7	11	4	6,75	50	2500
T_14 757 87	PG21	10 - 20	29	0,5 - 4,5	36	9	11	4	6,75	25	1500
T_14 757 88	PG29	18 - 27	38	1,5 - 4,5	45	17	13,5	4,84	7,41	25	1000
RAL XYZ											
TSS PG9 XYZ	PG9	5 - 10	16	0,5 - 3	24	4	11	4	6,75	50	4000
TSS PG11 XYZ	PG11	6 - 12	19	0,5 - 3	26	5	11	4	6,75	50	3500
TSS PG16 XYZ	PG16	8 - 15	23	0,5 - 3,5	30	7	11	4	6,75	50	2500
TSS PG21 XYZ	PG21	10 - 20	29	0,5 - 4,5	36	9	11	4	6,75	25	1500
TSS PG29 XYZ	PG29	18 - 27	38	1,5 - 4,5	45	17	13,5	4,84	7,41	25	1000

** Varies depending on the thickness of material installed in.*

(1) Unstressed material.

Material	TPE V0 - Thermoplastic Elastomer Halogen Free UL listed material
Mode of protection	IP67
Temperature range	-40ºC....+80ºC (1)
Test standard	EN 60670-1:2005+A1:2013
Semko report	NA

- Quick and simple assembly without the use of tools
- Handles large cable span
- An end-plug for all applications
- Material is UL 94 V0 classified

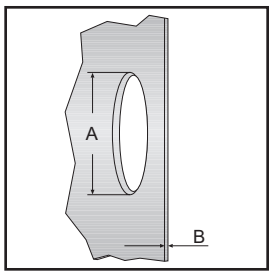

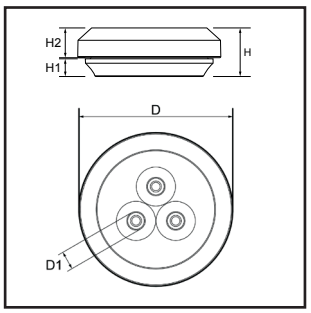

Product number	Size	For cable/ pipe Ø mm	A mm	B mm	D* mm	D1 mm	H mm	H1 mm	H2* mm	Pcs pack	
RAL 7035											
T_14 757 68	M20	3x 4 - 7	20,5	0,5 - 3	27,5	3	11	4	6,75	50	3500
T_14 757 69	M25	3x 4 - 9	25,5	0,5 - 3,5	32,5	3	11	4	6,75	50	2500
T_14 757 89	PG11	3x 4 - 6	19	0,5 - 3	26	3	11	4	6,75	50	3500
T_14 757 90	PG16	3x 4 - 8	23	0,5 - 3,5	30	3	11	4	6,75	50	2500
RAL 9005											
T_14 757 70	M20	3x 4 - 7	20,5	0,5 - 3	27,5	3	11	4	6,75	50	3500
T_14 757 71	M25	3x 4 - 9	25,5	0,5 - 3,5	32,5	3	11	4	6,75	50	2500
T_14 757 91	PG11	3x 4 - 6	19	0,5 - 3	26	3	11	4	6,75	50	3500
T_14 757 92	PG16	3x 4 - 8	23	0,5 - 3,5	30	3	11	4	6,75	50	2500
RAL 9010											
T_14 757 72	M20	3x 4 - 7	20,5	0,5 - 3	27,5	3	11	4	6,75	50	3500
T_14 757 73	M25	3x 4 - 9	25,5	0,5 - 3,5	32,5	3	11	4	6,75	50	2500
T_14 757 93	PG11	3x 4 - 6	19	0,5 - 3	26	3	11	4	6,75	50	3500
T_14 757 94	PG16	3x 4 - 8	23	0,5 - 3,5	30	3	11	4	6,75	50	2500
RAL XYZ											
TSS MULTI M20 XYZ	M20	3x 4 - 7	20,5	0,5 - 3	27,5	3	11	4	6,75	50	3500
TSS MULTI M25 XYZ	M25	3x 4 - 9	25,5	0,5 - 3,5	32,5	3	11	4	6,75	50	2500
TSS MULTI PG11 XYZ	PG11	3x 4 - 6	19	0,5 - 3	26	3	11	4	6,75	50	3500
TSS MULTI PG16 XYZ	PG16	3x 4 - 8	23	0,5 - 3,5	30	3	11	4	6,75	50	2500

NA - Not available at time of printing

** Varies depending on the thickness of material installed in.*

(1) Unstressed material.

Why TST Grommets

What makes our grommets different from the competition?

- Totally automated production in all phases. Production method guarantees an exact quality on all types at all times, also giving very aesthetically pleasing products.
- No tool is required at application, thereby lower work cost. No screwdriver required to make a hole, which often makes an uneven hole adventuring proofing. No scissors to cut off a teat, which often gives wrong size for guaranteed proofing.
- The opening is always sealed until the membrane is pushed out – no need for stop-plugs or end-plugs in the mean time, which creates extra costs.
- Quick and easy installation from one side only -- not necessary to be able to reach opposite side of installation to attach locknut.
- Ergonomically better, no strain on wrists since it does not need to be screwed into place.
- Ideal where space is restricted - less protrusion and space needed. Available in PG & Metric sizes and in several colours and materials.
- All are SEMKO approved for IP67. DNV approval for RUTASEAL® in Chloroprene. KLIKSEAL® approved for cable anchorage type A.
- Superior grommets, both economically and in quality.
- Our new packaging-line allows for customer specified package –size and -labels, should standard sizes and labels not fit your needs.

Examples of applications for RUTASEAL® & TSS

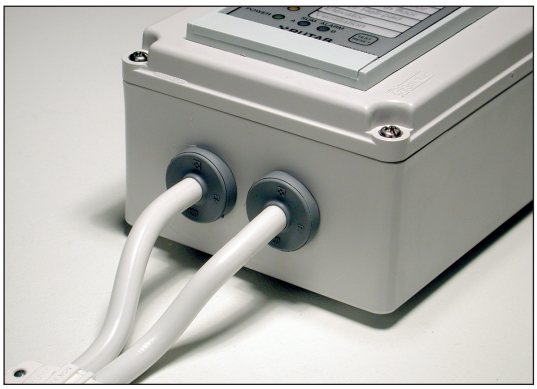

Enclosures and boxes

Light fixtures

Round surfaces

Enclosures

Design - A - Flange

With Design-A-Flange we are introducing a brand new flange concept, with an unparalleled level of protection and flexibility.

Design-A-Flange is an innovative modular system where inserts can be changed depending on your needs. You can design your own configuration based on how many openings you want, where you want them placed, and what type of seal you want to have. You are no longer forced to use a fixed flange with a certain number of pre-determined openings. You choose the configuration that suits your needs.

The push-out membranes ensures fast and easy installation without worries about achieving the correct IP-level. Should you want cable anchorage on certain cables then just install a Klikseal or a cable gland in the flange. If a cable no longer will be used you can seal the opening either by replacing the insert or cutting out the membrane and sealing the opening with one of our grommets.

Cable penetration by design

Design-A-Flange offers a number of features that you cannot find in any other flange solutions

- Design your own configuration, with the right size openings, and right number of openings placed where you want them
- Push-out membranes to make installation fast, easy and fool-proof
- High IP-protection
- No need to drill separate holes to install a Klikseal or a cable gland
- The inserts are easily changed to adapt to new needs
- Very easy to seal an opening that no longer will be used

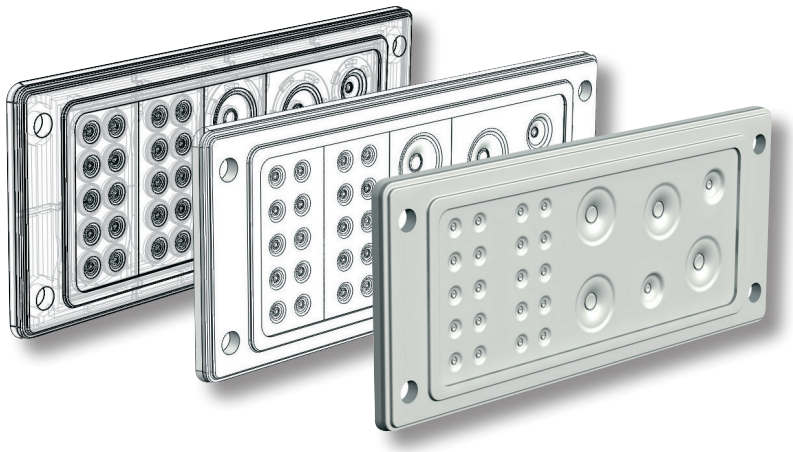

DESIGN-A-FLANGE

The design and technique

Design-A-Flange is very compact in its design and very easy to install. Just slide the inserts together, place them in the frame and install. The inserts lock on to each other as well as to the frame, ensuring a safe and secure installation. Fiberglass re-inforced Polypropylene is used for the frame and the inserts, ensuring a very rigid structure. The soft TPE lets us incorporate push-out membrane seals with exceptional sealing properties. The two materials together make it possible to have a flange system with a very slim design. Design-A-Flange is made to have low protrusion and will take up very little space. This allows for very discrete and aesthetic installations. You can even have cable anchorage on your cables by using KLIKSEAL® and still have an installation that takes up a minimum of space. Design-A-Flange is available in the sizes that are most commonly used on the market today. The system is continuously growing and we are sure you will find a version that suits your needs.

Have you ever used a flange with too many pre-determined openings in strange size-configurations that will never be used?

You are no longer forced to use a flange where someone else has decided what size openings, how many, and where they

are placed. A pre-determined solution where you often end up having quite a few openings unused is now a thing of the past.

With Design-A-Flange you have the freedom to decide where the inserts are placed, and where the different size openings should be in the frame. You are then able to get a sealing solution that is easier to install, and a very clean uncluttered cable installation.

With Design-A-Flange you can either chose a pre-configured kit or design your own configuration - allowing for a completely tailor made solution.

Have you ever worried about incorrect installations?

All our Design-A-Flange inserts are equipped with push-out membranes. No tools are needed to install the cables. Just push the cables through the membrane of the seal and the installation is complete. Since you always will have a round opening, you are guaranteed to have IP65. You do not need to worry about cutting the right size opening to match the diameter of the cable, or that you made the opening uneven and therefore endangered the IP-classification. Our inserts are designed to avoid these worries and to make sure you have a safe and secure installation with a minimum of work.

The bottom side of the membrane-seal is equipped with a sock that fits tightly around the cable, assuring the IP class even when the cable passes through at an angle.

Have you ever used a flange that is IP65 until you install a cable in it?

A common issue with today's flanges is that either the IP-rating decreases as soon as a cable is installed, or you cannot get a protection level of at least IP65.

With Design-A-Flange you can now have a flange system that is rated IP65, with or without cables installed. For the first time ever you have a flange that provides exceptionally high IP-protection and flexibility.

Have you ever been forced to use a cable gland in addition to a flange to fulfil the demands placed on your installation?

Design-A-Flange and its interchangeable inserts give you an extremely flexible flange solution, allowing you to combine different types of seals. If our water- and dust proof membrane seals are not enough you can cut them out or choose the knock-out insert and install a Klikseal or a cable gland. You can then have cable anchorage for those cables needing this. This gives you the ability to combine different levels of strain relief and IP-rating in the same flange. Design-A-Flange offers tremendous flexibility as you have the possibility to adapt the system even after installation, to fit changing needs or new installations. For the first time ever you are allowed to design a flange solution that suits all your needs – from cable placement to sealing type.

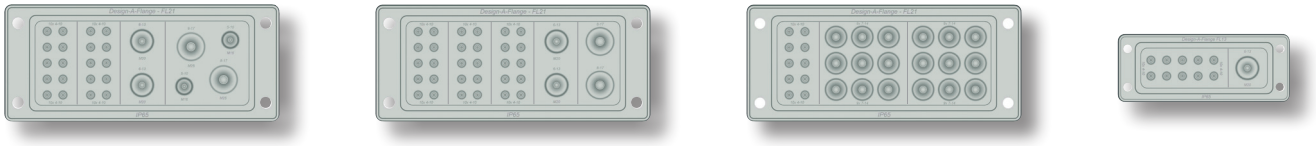

Have you ever wanted to seal an opening where a cable used to be installed?

If you no longer need to use a certain cable it is not necessary to replace the whole flange to seal the opening. You can replace the affected insert with a new one – leaving all other cables installed. Depending on the size of the opening you can also seal the opening by cutting out the membrane seal and installing one of our grommets. The opening can then be “re-used” when needed. Either way you save both time and money compared to other flange solutions.

Have you ever worried about needs changing in the future?

You can choose if you want to have a configuration that is suited for today’s needs or one that allows flexibility for the future. Even if your needs change in the future and you did not initially plan for this, you do not need to worry as the inserts can be changed to fit your new demands.

Product advantages Design-A-Flange

Interchangeable inserts

Design your own solution

Compact design

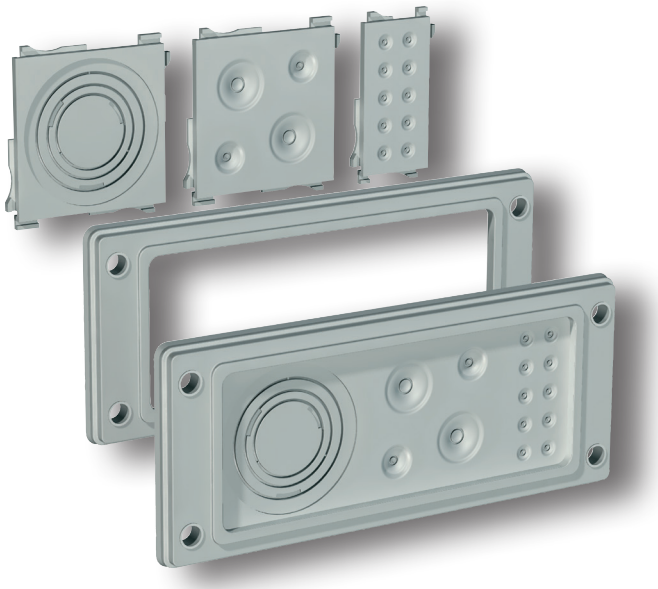

”Pushout” membranes.

IP65, with or without cables

”Free placement” of openings

Possible to change configuration later on.

KLIKSEAL® or cable gland installation in the flange.

The Design-A-Flange System

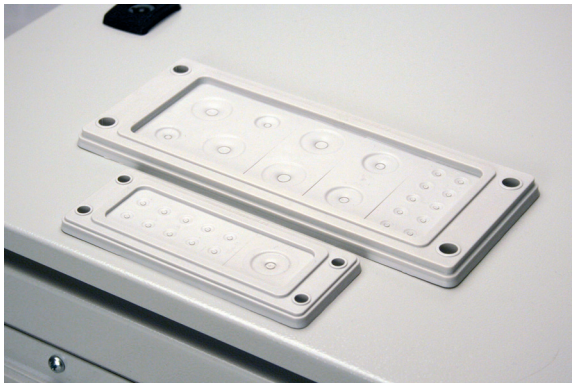

Material	Fiberglass re-inforced Polypropylene and TPE - Halogen Free UL listed materials
Mode of protection	IP65
Temperature range	-20ºC....+125ºC (1)
Test standard	EN 60529:1991+A1 EN 60670-1:2005+A1:2013
Semko report	816003

- Design your own solution
- Interchangeable inserts
- ”Free placement” of openings
- KLIKSEAL or cable gland installation in the flange

Prefabricated Flanges	
FL21	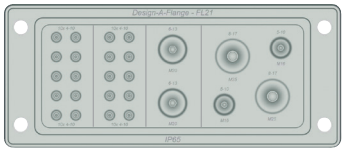 ***T_26 654 01 / 19*** *Frame + 2(8-17 5-10 6-13) + 20X4-10*
FL21	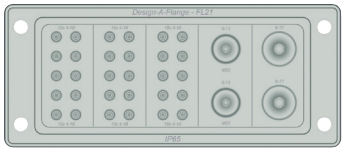 ***T_26 654 02 / 20*** *Frame + 2(8-17 6-13) 30X4-10*
FL21	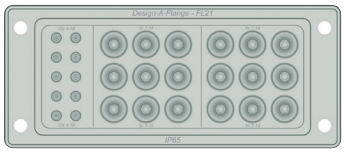 ***T_26 654 03 / 21*** *Frame + 18X7-14 10X4-10*
FL13	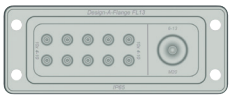 ***T_26 654 05 / 23*** *Frame + 6-13 10X4-10*

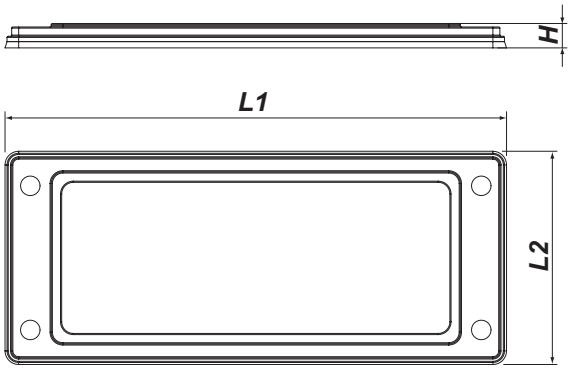

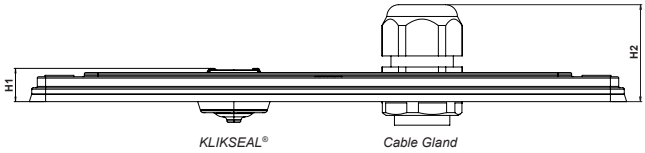

Size	L1 mm	L2 mm	H mm	H1 mm	H2 mm
FL 13	134	52	6,5	12	~ 35
FL 21	214	90	9	12	~ 35

Installation of cables
Push the cable through the membrane until the membrane pops out, or push out the membrane before installing the cable with a smaller cable or screwdriver.

(1) Unstressed material.

The Design-A-Flange system also available in black.

The DESIGN-A-FLANGE System

Frame
FL21
T_26 654 00 / 18

Inserts 68x68 for FL21			
2x M25 (8-17mm) *2x M16 (5-10 mm)* *T_26 654 06 / 24*	*KO M32 M40 M50* *T_26 654 07 / 25*	*9x 7-14 mm* *T_26 654 08 / 26*	*2x 20-30mm* *2x 10-20 mm* *T_26 654 09 / 27*

Inserts 68x34 for FL21		
		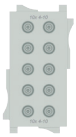
2x 8-17mm *T_26 654 11 / 29*	*2x M20 (6-13mm)* *T_26 654 12 / 30*	*10x 4-10mm* *T_26 654 13 / 31*

Frame
FL13
T_26 654 04 / 22

Inserts 34x68 for FL13		
	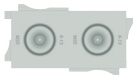	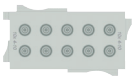
2x 8-17mm *T_26 654 14 / 32*	*2x M20 (6-13mm)* *T_26 654 15 / 33*	*10x 4-10mm* *T_26 654 16 / 34*

Insert 34x34 for FL13
1x M20 (6-13mm) *T_26 654 17 / 35*

Build your own flange at www.tst-ab.com/daf_tst

Material	Fiberglass re-inforced Polypropylene and TPE - Halogen Free UL listed materials
Mode of protection	IP65
Temperature range	-20ºC....+125ºC (1)
Test standard	EN 60529:1991 + A1 EN 60670-1:2005+A1:2013
Semko report	816003

- Design your own solution
- Interchangeable inserts
- ”Free placement” of openings
- KLIKSEAL or cable gland installation in the flange

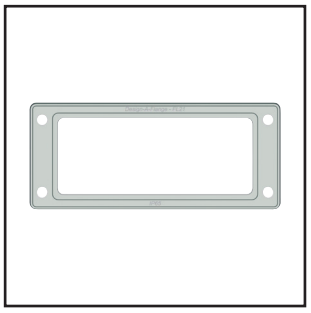

E-26 654 00 / 18

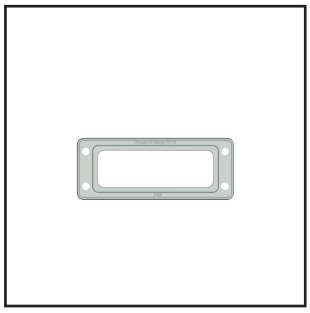

E-26 654 04 / 22

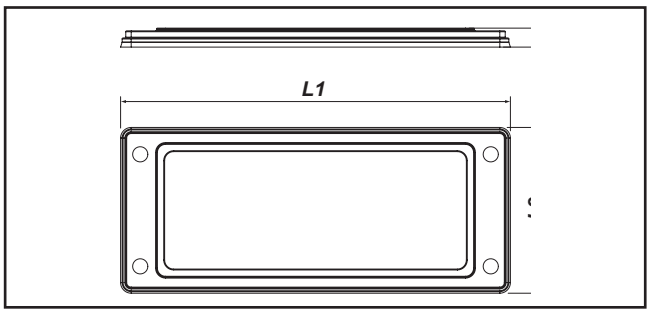

Product number	Size	L1 mm	L2 mm	H mm	Pcs pack	
RAL 7035						
T_26 654 00	FL21	214	90	9	10	100
T_26 654 04	FL13	134	52	6,5	10	100
RAL 9005						
T_26 654 18	FL21	214	90	9	10	100
T_26 654 22	FL13	134	52	6,5	10	100
RAL XYZ						
FL21 FRAME XYZ	FL21	214	90	9	10	100
FL13 FRAME XYZ	FL13	134	52	6,5	10	100

Normes et dimensions

FL 13

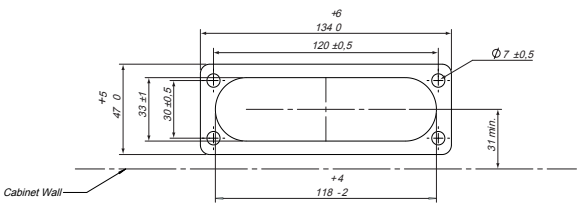

FL 21

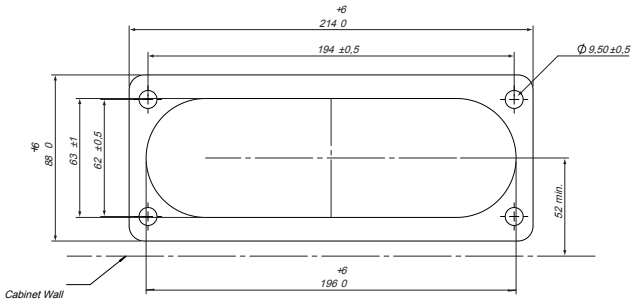

(1) Unstressed material.

Inserts for FL13

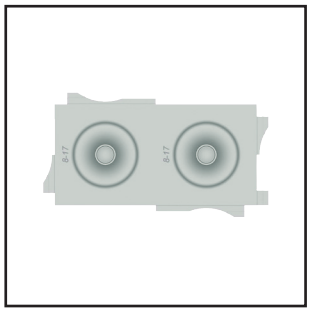

T_26 654 14 / 32

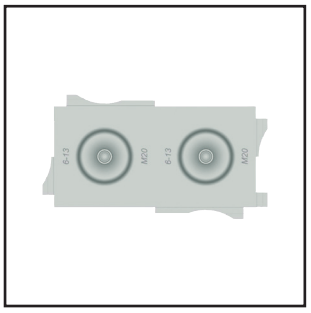

T_26 654 15 / 33

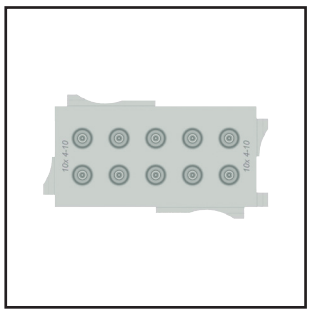

T_26 654 16 / 34

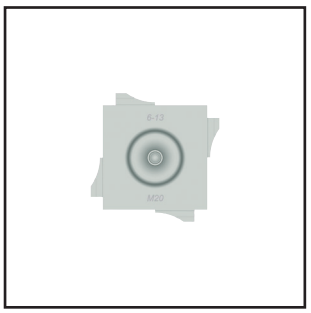

T_26 654 17 / 35

Material	Fiberglass re-inforced Polypropylene and TPE - Halogen Free UL listed materials
Mode of protection	IP65
Temperature range	-20ºC....+125ºC (1)
Test standard	EN 60529:1991 + A1 EN 60670-1:2005+A1:2013
Semko report	816003

- Design your own solution
- Interchangeable inserts
- ”Free placement” of openings
- KLIKSEAL or cable gland installation in the flange

Product number	For use with frame	Description	For cable/pipe Ø mm	Pcs pack	
RAL 7035					
T_26 654 14	FL13	Insert for FL13 34x68, 2x 8-17	8 - 17	10	100
T_26 654 15	FL13	Insert for FL13 34x68 2x M20	6 - 13	10	100
T_26 654 16	FL13	Insert for FL13 34x68 10x 4-10mm	4 - 10	10	100
T_26 654 17	FL13	Insert for FL13 34x34 M20	6 - 13	10	100
RAL 9005					
T_26 654 32	FL13	Insert for FL13 34x68, 2x 8-17	8 - 17	10	100
T_26 654 33	FL13	Insert for FL13 34x68 2x M20	6 - 13	10	100
T_26 654 34	FL13	Insert for FL13 34x68 10x 4-10mm	4 - 10	10	100
T_26 654 35	FL13	Insert for FL13 34x34 M20	6 - 13	10	100
RAL XYZ					
13 6834 2X8-17 XYZ	FL13	Insert for FL13 34x68, 2x 8-17	8 - 17	10	100
13 6834 2X6-13 XYZ	FL13	Insert for FL13 34x68 2x M20	6 - 13	10	100
13 6834 10X4-10 XYZ	FL13	Insert for FL13 34x68 10x 4-10mm	4 - 10	10	100
13 3434 6-13 XYZ	FL13	Insert for FL13 34x34 M20	6 - 13	10	100

Installation of cables
Push the cable through the membrane until the membrane pops out, or push out the membrane before installing the cable with a smaller cable or screwdriver.

(1) Unstressed material.

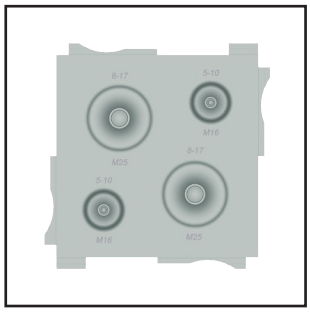
T_26 654 06 / 24

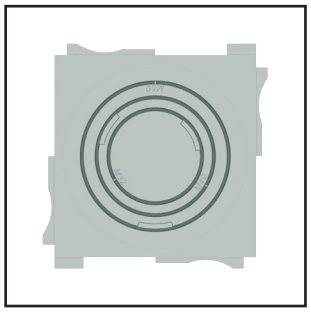
T_26 654 07 / 25

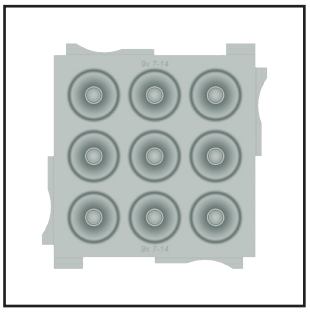
T_26 654 08 / 26

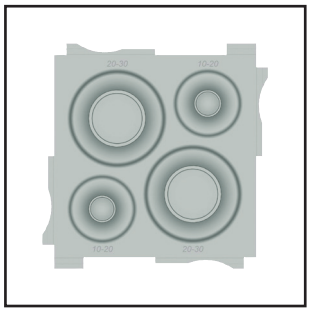
T_26 654 09 / 27

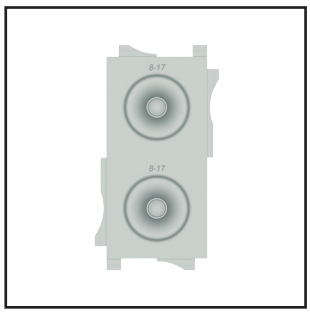
T_26 654 11 / 29

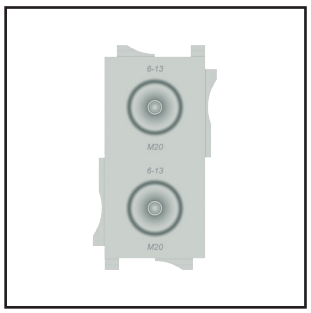
T_26 654 12 / 30

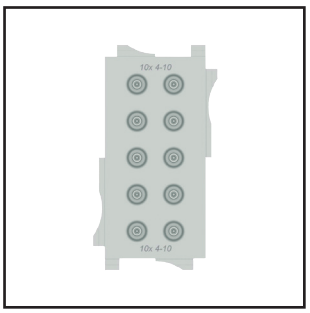
T_26 654 13 / 31

Product number	For use with frame	Description	For cable/pipe Ø mm	Pcs pack	
RAL 7035					
T_26 654 06	FL21	Insert for FL21 68x68, 2xM25 + 2xM16	8-17, 5-10	10	100
T_26 654 07	FL21	Insert for FL21 68x68 Knockout M50, M40, M32	-	10	100
T_26 654 08	FL21	Insert for FL21 68x68 9x 7-14mm	7-14	10	100
T_26 654 09	FL21	Insert for FL21 68x68 2x 20-30mm + 2x 10-20mm	20-30, 10-20	10	100
T_26 654 11	FL21	Insert for FL21 68x34 2x 8-17mm	8-17	10	100
T_26 654 12	FL21	Insert for FL21 68x34 2x M20	6-13	10	100
T_26 654 13	FL21	Insert for FL21 68x34 10x 4-10mm	4-10	10	100
RAL 9005					
T_26 654 24	FL21	Insert for FL21 68x68, 2xM25 + 2xM16	8-17, 5-10	10	100
T_26 654 25	FL21	Insert for FL21 68x68 Knockout M50, M40, M32	-	10	100
T_26 654 26	FL21	Insert for FL21 68x68 9x 7-14mm	7-14	10	100
T_26 654 27	FL21	Insert for FL21 68x68 2x 20-30mm + 2x 10-20mm	20-30, 10-20	10	100
T_26 654 29	FL21	Insert for FL21 68x34 2x 8-17mm	8-17	10	100
T_26 654 30	FL21	Insert for FL21 68x34 2x M20	6-13	10	100
T_26 654 31	FL21	Insert for FL21 68x34 10x 4-10mm	4-10	10	100
RAL XYZ					
6868 2(8-17 5-10) XYZ	FL21	Insert for FL21 68x68, 2xM25 + 2xM16	8-17, 5-10	10	100
6868 KO M50 M40 M32 XYZ	FL21	Insert for FL21 68x68 Knockout M50, M40, M32	-	10	100
6868 9X7-14 XYZ	FL21	Insert for FL21 68x68 9x 7-14mm	7-14	10	100
6868 2(20-30 10-20) XYZ	FL21	Insert for FL21 68x68 2x 20-30mm + 2x 10-20mm	20-30, 10-20	10	100
6834 2X8-17 XYZ	FL21	Insert for FL21 68x34 2x 8-17mm	8-17	10	100
6834 2X6-13 XYZ	FL21	Insert for FL21 68x34 2x M20	6-13	10	100
6834 10X4-10 XYZ	FL21	Insert for FL21 68x34 10x 4-10mm	4-10	10	100

Installation of cables
Push the cable through the membrane until the membrane pops out, or push out the membrane before installing the cable with a smaller cable or screwdriver.

For technical info about the inserts see page 28.

Preconfigured Kits FL21

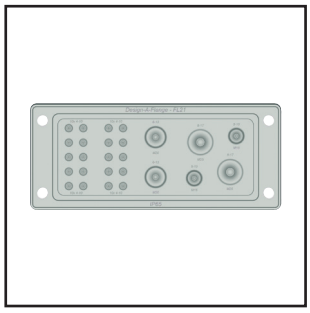

T_26 654 01 / 19

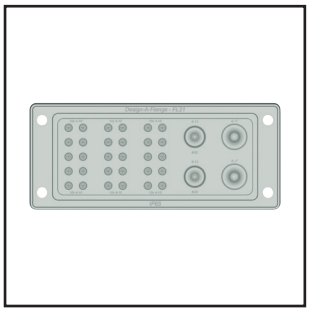

T_26 654 02 / 20

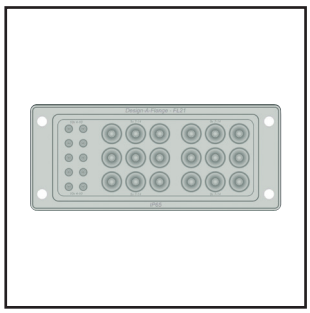

T_26 654 03 / 21

Material	Fiberglass re-inforced Polypropylene and TPE - UL listed materials Halogen-Free
Mode of protection	IP65
Temperature range	-20ºC....+125ºC (1)
Test standard	EN 60529:1991 + A1 EN 60670-1:2005+A1:2013
Semko report	816003

- Design your own solution
- Interchangeable inserts
- ”Free placement” of openings
- KLIKSEAL or cable gland installation in the flange

Please visit www.tst-ab.com for a complete list of kits.

Product number	Size	Description	For cable/pipe Ø mm	Pcs pack	
RAL 7035					
T_26 654 01	FL21	Flange FL21 2x(M25M16M20) 20x4-10	2x 5 - 10 mm 2x 8 - 17 mm 2x 6 -13 mm 20x 4 - 10 mm	10	100
T_26 654 02	FL21	Flange FL21 2xM20 2x(8-17) 30x4-10	2x 6 - 13 mm 2x 8 - 17 mm 30x 4 - 10 mm	10	100
T_26 654 03	FL21	Flange FL21 18x7-14 10x4-10	18x 7 - 14 mm 10x 4 - 10 mm	10	100
RAL 9005					
T_26 654 19	FL21	Flange FL21 2x(M25M16M20) 20x4-10	2x 5 - 10 mm 2x 8 - 17 mm 2x 6 -13 mm 20x 4 - 10 mm	10	100
T_26 654 20	FL21	Flange FL21 2xM20 2x(8-17) 30x4-10	2x 6 - 13 mm 2x 8 - 17 mm 30x 4 - 10 mm	10	100
T_26 654 21	FL21	Flange FL21 18x7-14 10x4-10	18x 7 - 14 mm 10x 4 - 10 mm	10	100
RAL XYZ					
2(8-17 5-10 6-13) 20X4-10 XYZ	FL21	Flange FL21 2x(M25M16M20) 20x4-10	2x 5 - 10 mm 2x 8 - 17 mm 2x 6 -13 mm 20x 4 - 10 mm	10	100
T2(8-17 6-13) 30X4-10 XYZ	FL21	Flange FL21 2xM20 2x(8-17) 30x4-10	2x 6 - 13 mm 2x 8 - 17 mm 30x 4 - 10 mm	10	100
18X7-14 10X4-10 XYZ	FL21	Flange FL21 18x7-14 10x4-10	18x 7 - 14 mm 10x 4 - 10 mm	10	100

Installation of cables
Push the cable through the membrane until the membrane pops out, or push out the membrane before installing the cable with a smaller cable or screwdriver.

(1) Unstressed material.

Preconfigured Kit FL13

Material	Fiberglass re-inforced Polypropylene and TPE - UL approved materials Halogen-Free
Mode of protection	IP65
Temperature range	-20ºC....+125ºC (1)
Test standard	EN 60529:1991 + A1 EN 60670-1:2005+A1:2013
Semko report	816003

- Design your own solution
- Interchangeable inserts
- ”Free placement” of openings
- KLIKSEAL or cable gland installation in the flange

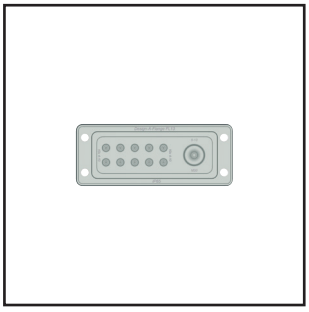

T_26 654 05 / 23

Please visit www.tst-ab.com for a complete list of kits.

Product number	Size	Description	For cable/pipe Ø mm	Pcs pack	
RAL 7035					
T_26 654 05	FL13	Flange FL13 1xM20 10x4-10	1x 6 - 13 mm 10x 4 - 10 mm	10	100
RAL 9005					
T_26 654 23	FL13	Flange FL13 1xM20 10x4-10	1x 6 - 13 mm 10x 4 - 10 mm	10	100
RAL 9010					
6-13 10X4-10 XYZ	FL13	Flange FL13 1xM20 10x4-10	1x 6 - 13 mm 10x 4 - 10 mm	10	100

Installation of cables
Push the cable through the membrane until the membrane pops out, or push out the membrane before installing the cable with a smaller cable or screwdriver.

(1) Unstressed material.

Customer Unique Products

From time to time we get requests by customers to make special versions of our products, catering to specific needs and requirements. In most cases we can tell you very early on in the process what the tooling and product costs will be. Hence, you can make prompt decisions on how to proceed.
Below you have a few examples of special solutions.

TSS with extra high UV-resistance

The standard version has excellent UV-resistance, but in this case the customer wanted extra high resistance as the product would be located right next to a UV-light, constantly exposed to UV-rays.
(An application used in restaurant fans where the UV-light is used to kill germs and odor). To meet the set specification we therefor developed this special TSS in a TPE-material with top notch UV-resistance.

TRS PG16/M16

The manufacturer wanted a TRS PG16, but with the same size opening as the standard TRS M16 (5-9mm cables). They did not have the possibility to change the diameter of the hole or the cable diameter, so we created a special version PG16 suitable for thinner cables

TRS Special version II and III

A client wanted a Rutaseal (TRS) M12 and M16 that would be easier to install in thicker materials. These new versions are designed for material thicknesses of 2-5mm (The standard versions are designed for material thicknesses of 0,5-2mm and 1-4mm). Both sizes are of course tested and certified to IP67, like all our TRS grommets.

TSS with smaller cable span

The TSS M20 with smaller cable span is designed for cables with a diameter of 3-5mm (standard version is for 6-13mm).

Oval shaped TSS

A customer needed a solution for two cables of different diameter, and chose an oval shape to keep the product diameter to a minimum.
The final product is an oval shaped TSS with push-out membranes, joy-stick function for one thicker and one thinner cable.

Product_Catalogue_Cable_Pipe_Entries_201703

Tapper Sealing Technology AB
Lerbacksgatan 2 | SE-571 38 Nässjö | Sweden
Tel: +46 380 558180 | Fax: +46 380 - 123 03
info@tst-ab.com | www.tst-ab.com

TST
TAPPER SEALING TECHNOLOGY